LV117

AREA FLOOD LIGHT WITH HOOD

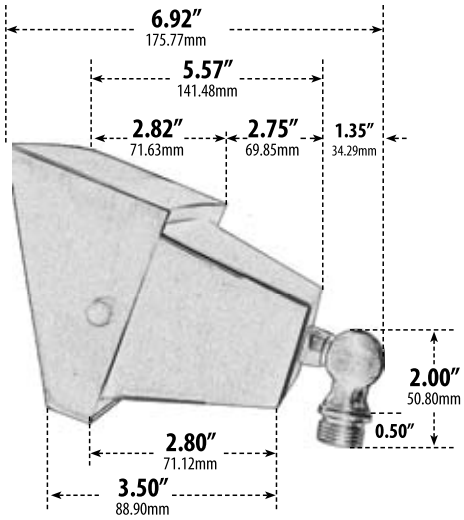

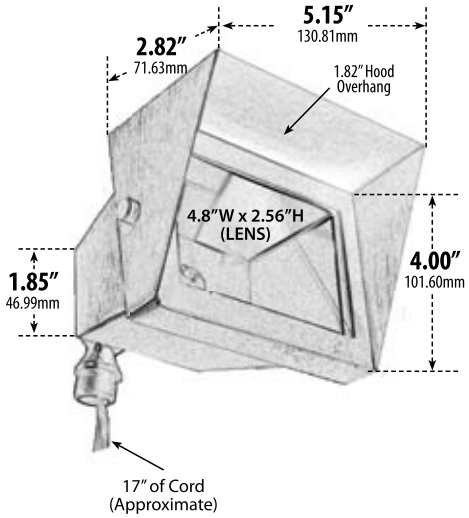

- **Material:** Brass
- **Lens:** Clear, Heat Resistant, Tempered Glass
- **Lamp:** JC Bi-Pin Base (50W Maximum)

MODEL NUMBER	LAMP TYPE	ILLUMINANT TYPE	WATTS (W)	VOLTS (V)	LAMP(S) INCLUDED?
LV117	JC	HALOGEN	20	12	YES
LV-LED117	JC-LED	LED	3.2	12	YES

Pre-wired with UL Listed Direct Burial Wire/Cable

- **Adjustable Knuckle with 1/2″ NPT**
- **Ground Spike Included for Installation**
- **Connector Available:** P-CN01 (sold separately)
- **Available Finish:** Copper, Antique Brass, Antique Bronze
- **ETL Approved**

Maximum Height: 8.00″
Minimum Height: 4.50″
Width: 5.15″
Maximum Depth: 7.00″
Minimum Depth: 5.50″

Weight: 1.4 lbs
Approximate Wire Length: 17.0″
Box Dimensions:
5.63″W x 7.50″H x 5.38″D

DABMAR LIGHTING

DABMAR LIGHTING INCORPORATED
2140 Eastman Ave . Oxnard, CA 93030 . 805.604.9090 . f: 805.604.9050 . www.dabmar.com